INSTALLATION INSTRUCTIONS

Premiere 304SS Gooseneck Sink Mixer

Mains Pressure Installation Only

ATTENTION PLUMBER

For best performance and to maintain customer satisfaction, please follow the guidelines below:

- Thoroughly flush all plumbing lines before beginning installation.
- Installation must comply with the AS/NZS 3500 standards.
- The maximum allowable operating pressure for any building is 500 kPa. Exceeding this limit can result in water hammer, premature wear on fixtures and appliances, and excessive noise throughout the system.
- A pressure-limiting valve is required if the supply pressure exceeds 500 kPa.

TECHNICAL INFORMATION

- This product is designed for high-pressure water systems only.
- It is not suitable for gravity-fed cylinders or low/unequal pressure installations.
- Minimum operating pressure: 150 kPa
- Maximum operating pressure: 500 kPa
- Maximum hot water temperature: 55°C
- If water temperature exceeds 55°C, an approved tempering valve must be installed.

Please leave this document with the product once installed.
For full warranty terms and conditions, please visit Codeinteriors.co.nz

INSTALLATION

Maximum compatible bench thickness: 40mm

Benchtop mounting hole required diameter: 35mm

- Remove the mounting nut, then slide off the steel and rubber washers from the mixer's threaded tail. Confirm the seal is correctly seated within the groove on the underside of the mixer flange.
- Secure the threaded tail to the mixer housing ensuring it is tightly fitted.
- Feed the mixer through the benchtop opening.
- From beneath the bench, slide on the rubber washer, followed by the steel washer, and then thread the mounting nut onto the threaded tail. Adjust the mixer to the correct position and tighten the jacking screws as required.

HANDLE INSTALLATION

Plug the handle onto the cartridge and screw it tightly by allen key.

Screw the pin handle firmly into the handle.

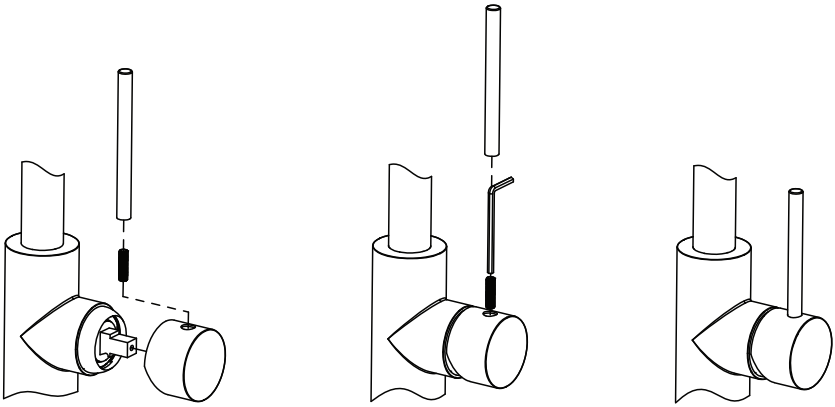

1. FIT THE INLET HOSES

A. Apply a light coating of approved plumbing grease to the inlet O-rings (grease not included).

B. Insert and hand-tighten the hot hose (red) into the hot inlet (red).

C. Insert and hand-tighten the cold hose (blue) into the cold inlet.

2. Connect the inlet hoses to the water supply:

A. Ensure the union nuts are fitted to 15 mm threaded fittings with a machined chamfered face, not cut-off tube threads.

B. Avoid overtightening. Hand-tighten each nut, then tighten an additional quarter turn with a spanner.

C. Do not bend, twist, stretch, or kink the hoses. Any curves must have a minimum radius of 85 mm.

3. Turn on the water supply, then check for leaks and proper flow.

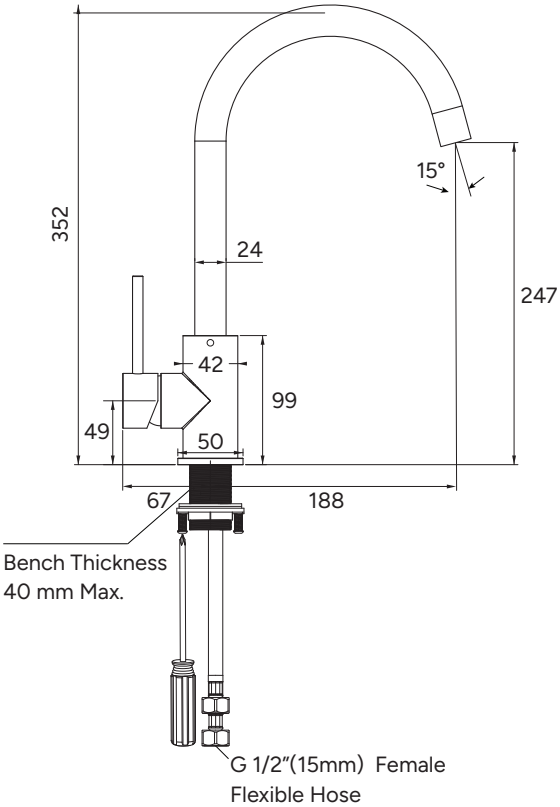

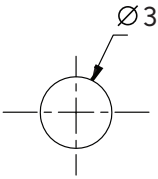

Mounting hole

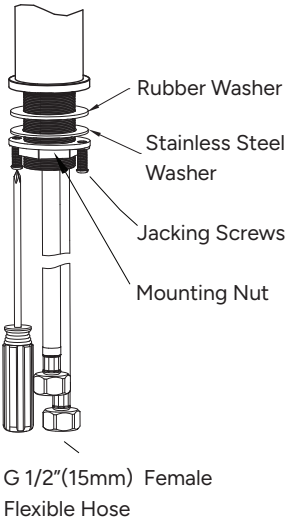

*All measurements are in millimetres. Sizes are nominal.

CARE & MAINTENANCE

- Clean the mixer regularly using a soft cloth and mild, non-abrasive soap solution.
- Avoid using acidic, alkaline, or abrasive cleaners, scouring pads, or harsh chemicals, as they can damage the surface finish and internal components.
- After cleaning, rinse thoroughly with fresh water and dry with a soft cloth to prevent water spotting and mineral build-up.
- Periodically check all visible connections for signs of leaks, looseness, or wear.
- Ensure the hot and cold supply pressures remain within the manufacturer's recommended limits to protect the cartridge and prolong service life.
- For mixers installed in hard-water environments, consider routine descaling of the aerator and filters to maintain performance.
- Regular maintenance will help preserve appearance, ensure smooth operation, and extend the lifespan of the sink mixer.

WARRANTY

TERM 10 YEARS
(5 YEARS PARTS & LABOUR, 5 YEARS PARTS ONLY)

- This sink mixer is covered by a manufacturer's warranty that applies to defects in materials or workmanship under normal residential use.
- The warranty period begins from the original date of purchase; proof of purchase is required for all claims.
- The warranty applies only when the product has been installed by a licensed plumber and maintained in accordance with the care and maintenance guidelines.
- The warranty does not cover damage resulting from incorrect installation, misuse, accidental damage, alterations, chemical exposure, or normal wear and tear.
- Components such as cartridges, seals, and aerators may have separate warranty terms or may be considered consumable items.
- If a defect is confirmed, the manufacturer will repair, replace, or supply replacement parts at their discretion. Labour, removal, or reinstallation costs may not be covered.
- For any warranty enquiry, contact the supplier or manufacturer with details of the issue, installation date, and proof of purchase.

A properly installed and maintained sink mixer will provide reliable service and ensure full warranty protection.

In accordance with our continuous product development, Code Interiors' sizes and specifications outlined in these specifications are subject to change without notice. Information detailed in this document represents actual product available at the time of publishing this sheet. For the latest version of this technical document please visit www.codeinteriors.co.nz or contact your nearest stockist to confirm any questions prior to purchase.