PRODUCT SPECIFICATION SHEET

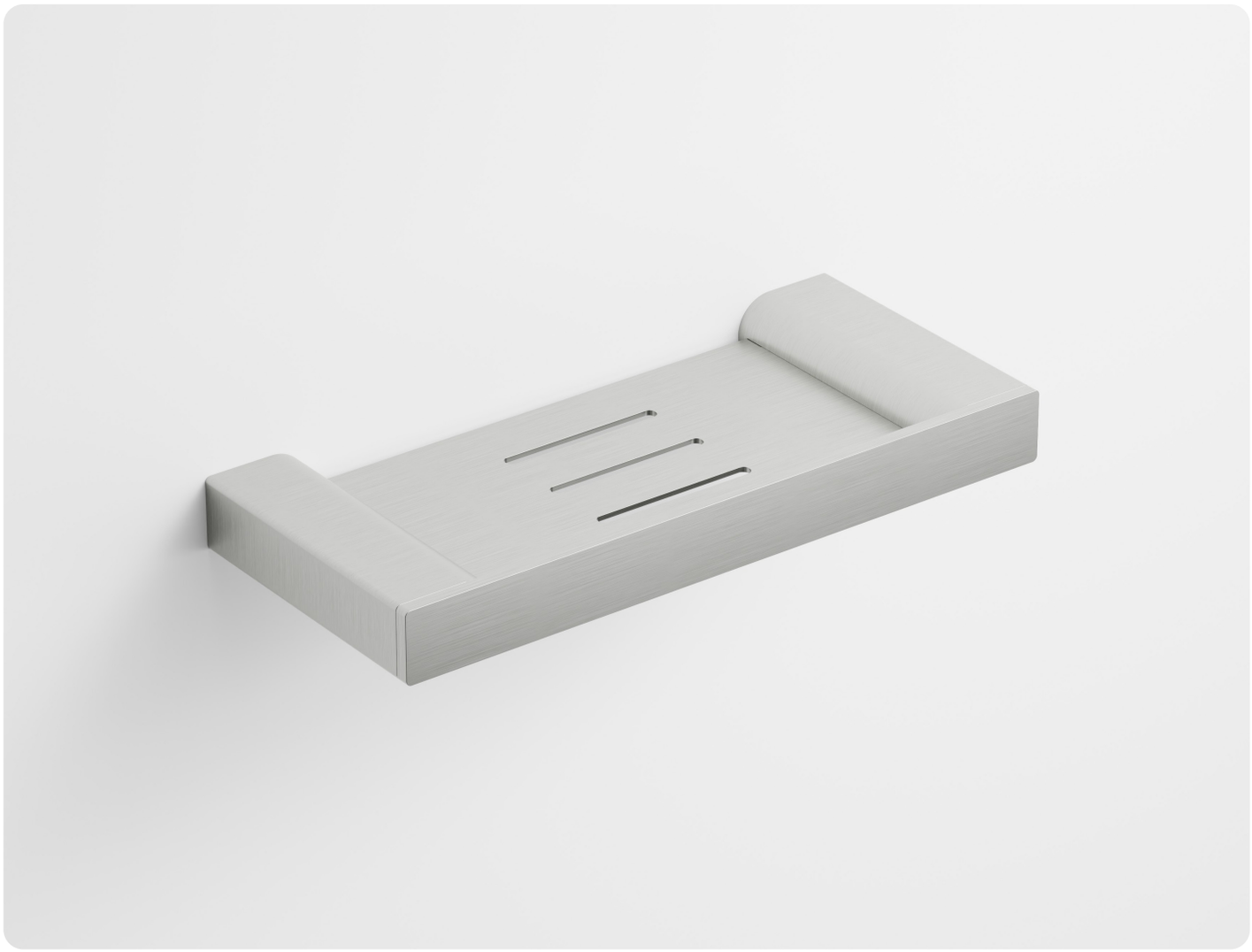

PURE 250 METAL SHELF

Model:	AP-2805	Warranty:	2 years
Size:	250 X 110 mm	Weight:	0.6 kg
Material:	304 Stainless Steel		
Installation:	Wall mount		

Colour Range:


Chrome


Matte Black


Matte White


Brushed Copper (PVD)


Gun Metal (PVD)


Brushed Brass (PVD)


Brushed Nickel (PVD)

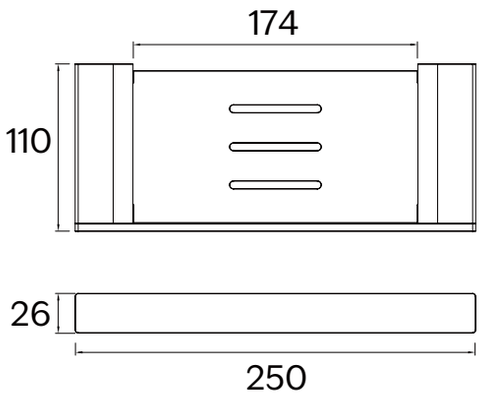

Note: All measurements shown are in millimetres. Sizes are nominal.

Distributed by:

CODE INTERIORS

In accordance with our continuous product development, Code interiors sizes and specifications outlined in these specifications are subject to change without notice. Information detailed in this document represents the actual product available at the time of printing this sheet. For the latest version of this technical sheet please visit www.codeinteriors.co.nz or contact your nearest stockist to confirm any questions prior to purchase.

sales@codeinteriors.co.nz | 09 973 4066 | www.codeinteriors.co.nz