PRODUCT SPECIFICATION SHEET

PREMIERE 304SS PULL DOWN SINK MIXER

Model:	PT-32100	Pressure type:	Mains pressure only
Material:	304 Stainless Steel	Warranty:	10 years
WELS rating:	5-Star		
Installation:	Bench mount		

Colour Range:

Chrome

Matte Black

Brushed Nickel (PVD)

Gunmetal (PVD)

Brushed Brass (PVD)

Brushed Bronze (PVD)

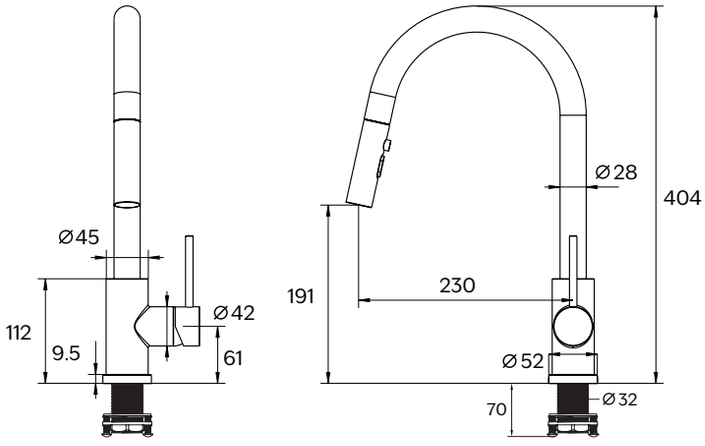

Note: All measurements shown are in millimetres. Sizes are nominal.

Distributed by:

CODE INTERIORS

In accordance with our continuous product development, Code interiors sizes and specifications outlined in these specifications are subject to change without notice. Information detailed in this document represents the actual product available at the time of printing this sheet. For the latest version of this technical sheet please visit www.codeinteriors.co.nz or contact your nearest stockist to confirm any questions prior to purchase.

sales@codeinteriors.co.nz | 09 973 4066 | www.codeinteriors.co.nz