CB005F - CB006

PLUMBLINE
+64 4 568 9898
sales@plumbline.co.nz
plumbline.co.nz

WALL-MOUNTED WASHBASIN MIXER

CB005F

CB006

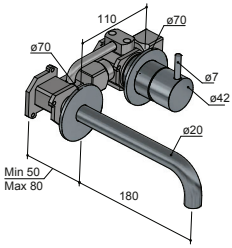

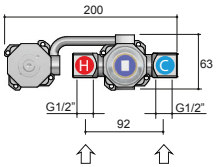

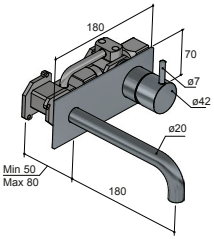

BUDDY	BUDDY X	BUDDY PRO	BUDDY PRO X

PRODUCT SCOPE OF USE
This Plumbline basin/sink mixer is intended for use in residential and commercial settings for the delivery of potable hot and cold water. It must be installed by a registered plumber in accordance with the installation instructions, the Plumbing Code of Australia (NCC Volume 3), NZBC G12 and AS/NZS 3500.

AS3718
WMK26994

LEAD-FREE COMPLIANCE
This product is certified as Lead-Free and complies with the Australian WaterMark Scheme (NCC Volume 3, Clause A5G4(2)) and NZBC G12.

BEFORE STARTING / PRIMA DI INIZIARE / AVANT DE COMMENCER / ANTES DE EMPEZAR / VOR DEM START / VOORDAT JE BEGINT

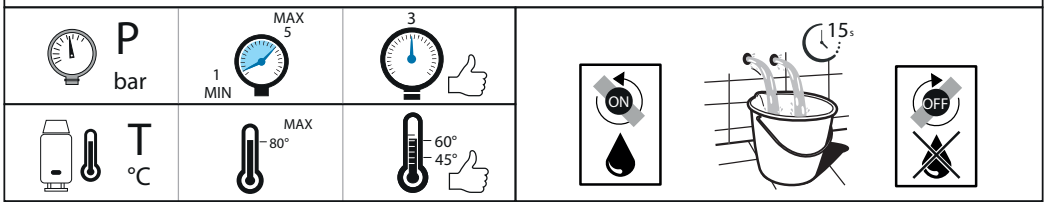

INSTALLATION

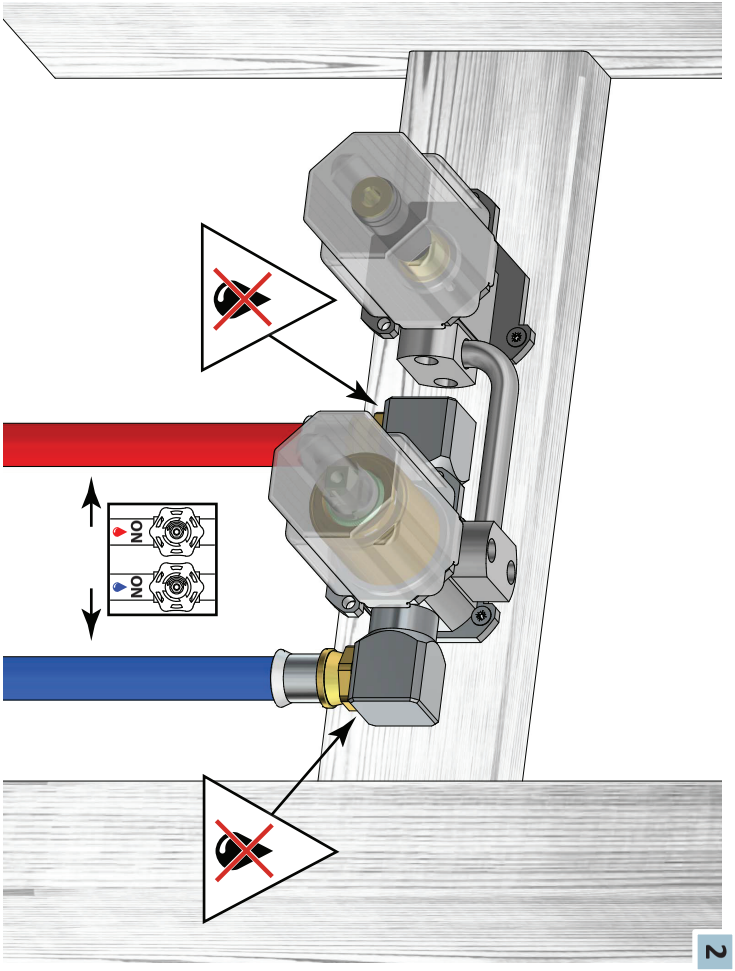

2

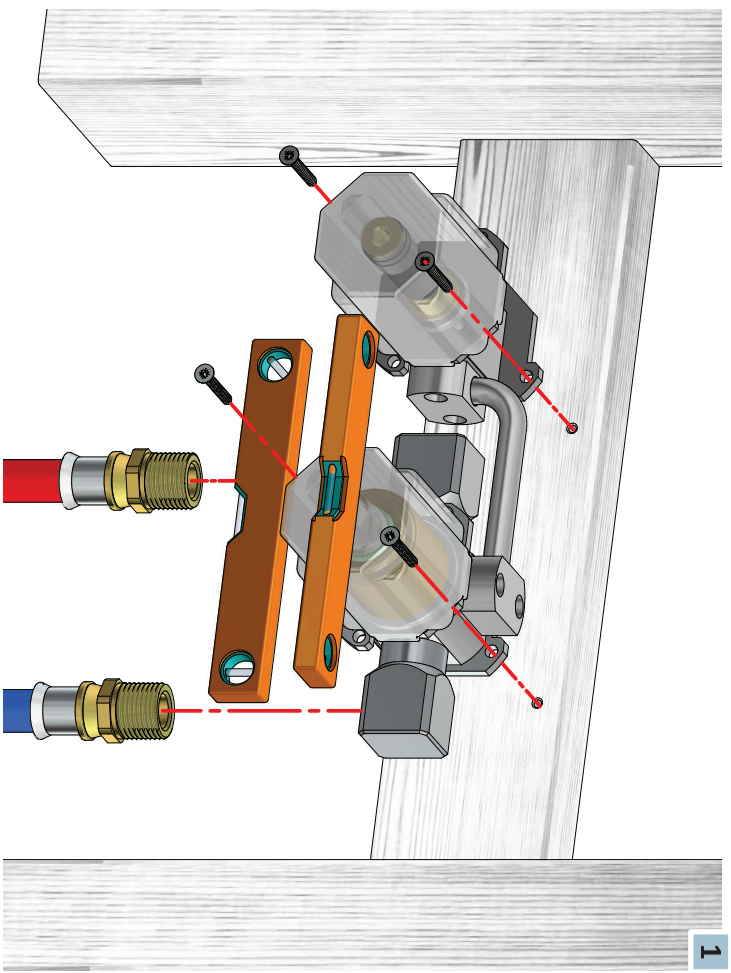

1

INSTALLATION

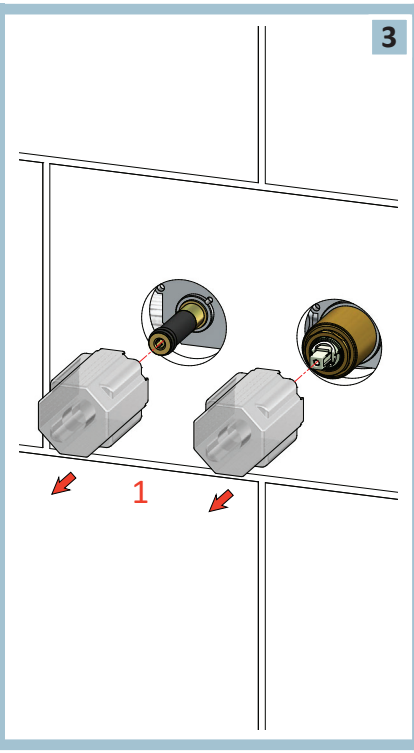

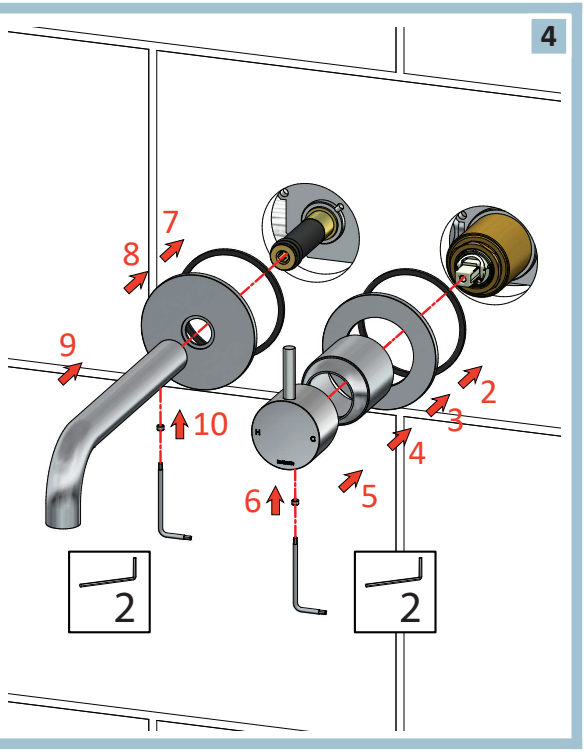

MAINTENANCE

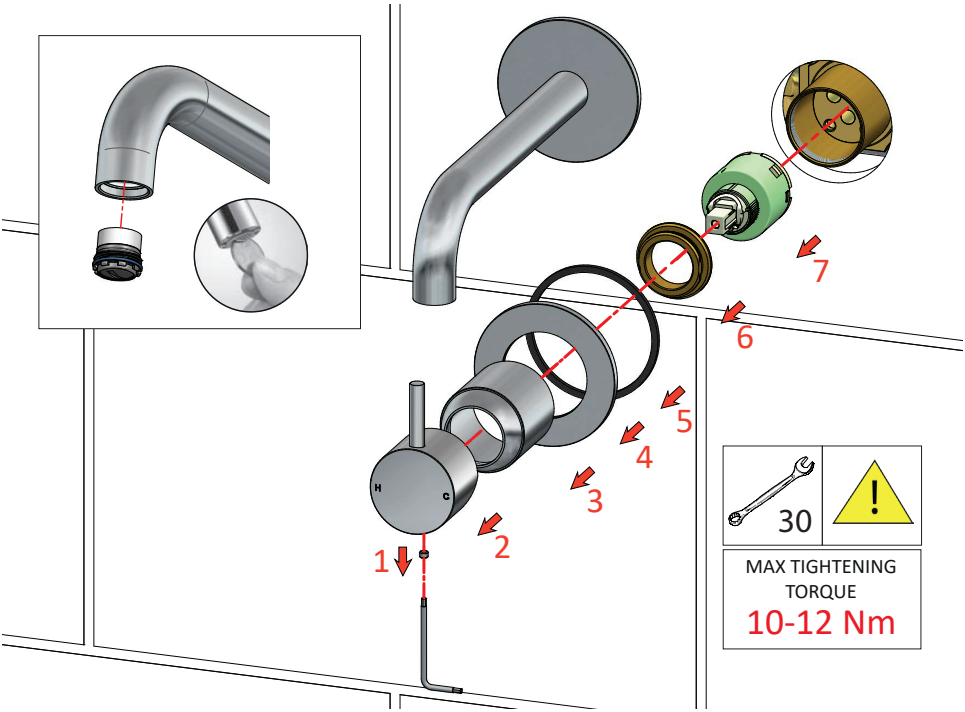

Cleaning

	✓			✗		WARNING
CR CHROME	WATER ✓	LIQUID SOAP ✓	SMOOTH CLOTH ✓	ABRASIVE SPONGE ✗	ACID/ABRASIVE DETERGENT ✗	Inoxidizable plated finish
GN BRUSHED NICKEL	WATER ✓	LIQUID SOAP ✓	SMOOTH CLOTH ✓	ABRASIVE SPONGE ✗	ACID/ABRASIVE DETERGENT ✗	Inoxidizable plated finish Avoid citrus based cleaners
BB BRUSHED BRASS	WATER ✓	LIQUID SOAP ✓	SMOOTH CLOTH ✓	ABRASIVE SPONGE ✗	ACID/ABRASIVE DETERGENT ✗	Natural metal finish: patina will form over time Avoid citrus based cleaners
AB AGED BRASS	WATER ✓	LIQUID SOAP ✓	SMOOTH CLOTH ✓	ABRASIVE SPONGE ✗	ACID/ABRASIVE DETERGENT ✗	Aged metal finish: patina will form over time Avoid citrus based cleaners
WH MATT WHITE	WATER ✓	LIQUID SOAP ✓	SMOOTH CLOTH ✓	ABRASIVE SPONGE ✗	ACID/ABRASIVE DETERGENT ✗	Varnished finish: subject to surface scratches if not properly handled Avoid citrus based cleaners
BL MATT BLACK	WATER ✓	LIQUID SOAP ✓	SMOOTH CLOTH ✓	ABRASIVE SPONGE ✗	ACID/ABRASIVE DETERGENT ✗	Varnished finish: subject to surface scratches if not properly handled Avoid citrus based cleaners
AI AGED IRON	WATER ✓	LIQUID SOAP ✓	SMOOTH CLOTH ✓	ABRASIVE SPONGE ✗	ACID/ABRASIVE DETERGENT ✗	Plated finish: subject to surface scratches if not properly handled Avoid citrus based cleaners
MGP MATT GUNMETAL PVD	WATER ✓	LIQUID SOAP ✓	SMOOTH CLOTH ✓	ABRASIVE SPONGE ✗	ACID/ABRASIVE DETERGENT ✗	Inoxidizable PVD finish Avoid citrus based cleaners
MCP MATT CHAMPAGNE PVD	WATER ✓	LIQUID SOAP ✓	SMOOTH CLOTH ✓	ABRASIVE SPONGE ✗	ACID/ABRASIVE DETERGENT ✗	Inoxidizable PVD finish Avoid citrus based cleaners
BBP BRUSHED BRASS PVD	WATER ✓	LIQUID SOAP ✓	SMOOTH CLOTH ✓	ABRASIVE SPONGE ✗	ACID/ABRASIVE DETERGENT ✗	Inoxidizable PVD finish Avoid citrus based cleaners
BZP BRUSHED BRONZE PVD	WATER ✓	LIQUID SOAP ✓	SMOOTH CLOTH ✓	ABRASIVE SPONGE ✗	ACID/ABRASIVE DETERGENT ✗	Inoxidizable PVD finish Avoid citrus based cleaners
TB TUSCAN BRONZE	WATER ✓	LIQUID SOAP ✓	SMOOTH CLOTH ✓	ABRASIVE SPONGE ✗	ACID/ABRASIVE DETERGENT ✗	Varnished finish: subject to surface scratches if not properly handled Avoid citrus based cleaners

Warranty

Scan Here
for Information