# CB004 - CB040 - CB041

PLUMBLINE
+64 4 568 9898
sales@plumbline.co.nz
plumbline.co.nz

## SINGLE-HOLE WASHBASIN AND SINK MIXERS

**CB004**

**CB040**

**CB041**

| BUDDY | BUDDY X | BUDDY PRO | BUDDY PRO X |
|---|---|---|---|
| | | | |

**PRODUCT SCOPE OF USE**
This Plumbline basin/sink mixer is intended for use in residential and commercial settings for the delivery of potable hot and cold water. It must be installed by a registered plumber in accordance with the installation instructions, the Plumbing Code of Australia (NCC Volume 3), NZBC G12 and AS/NZS 3500.

AS3718
WMK26994

**LEAD-FREE COMPLIANCE**
This product is certified as Lead-Free and complies with the Australian WaterMark Scheme (NCC Volume 3, Clause A5G4(2)) and NZBC G12.

**BEFORE STARTING / PRIMA DI INIZIARE / AVANT DE COMMENCER / ANTES DE EMPEZAR / VOR DEM START / VOORDAT JE BEGINT**

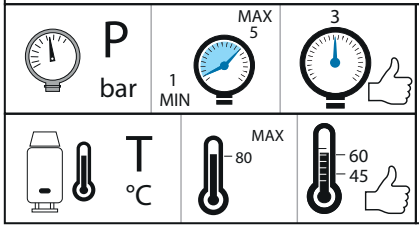


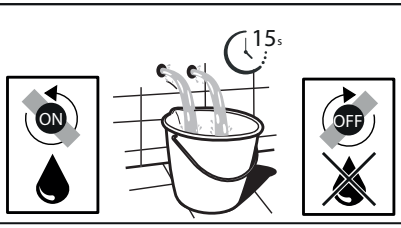


FILTER TAPS RECOMMENDED

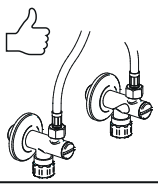

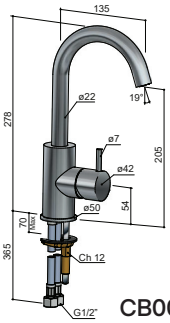


CB004

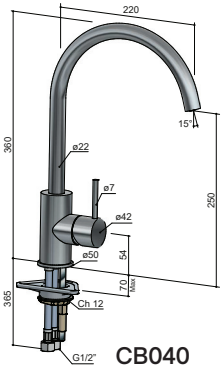


CB040

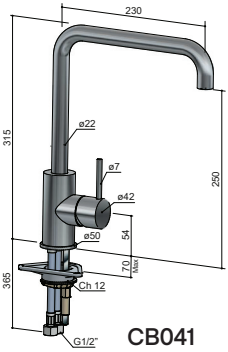


CB041

# INSTALLATION CB004

1

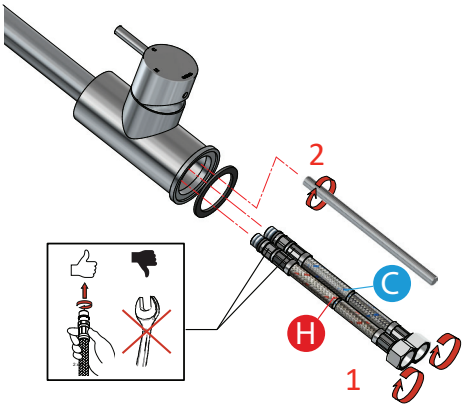


2

3

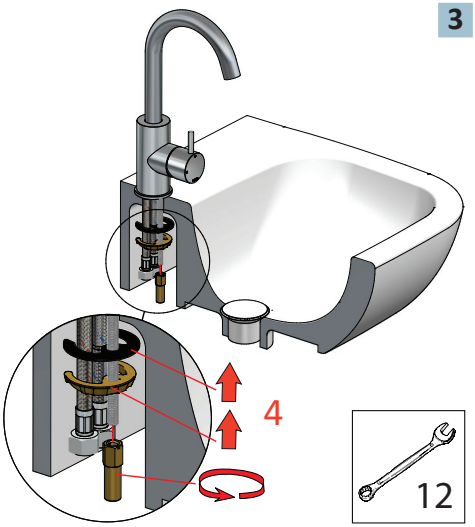


4

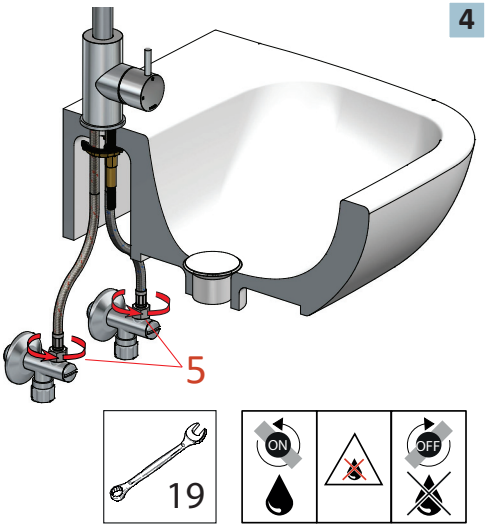

## INSTALLATION CB040 - CB041

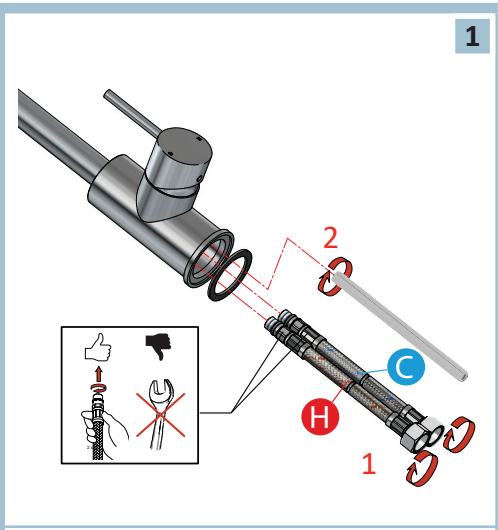


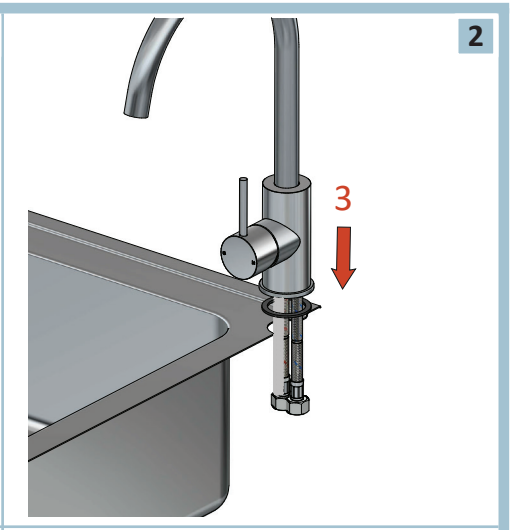


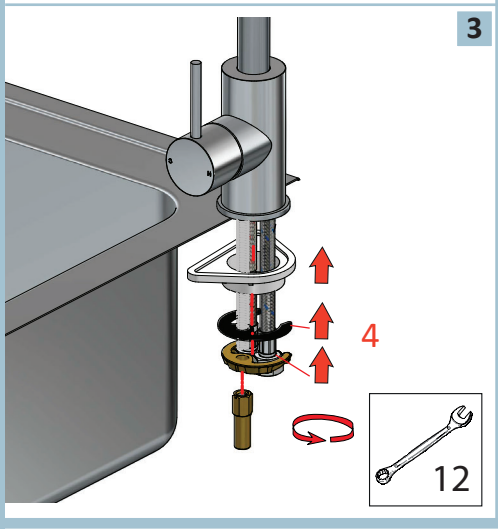


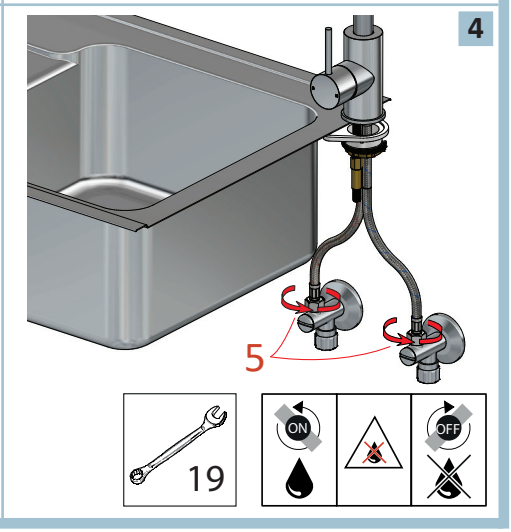


## MAINTENANCE

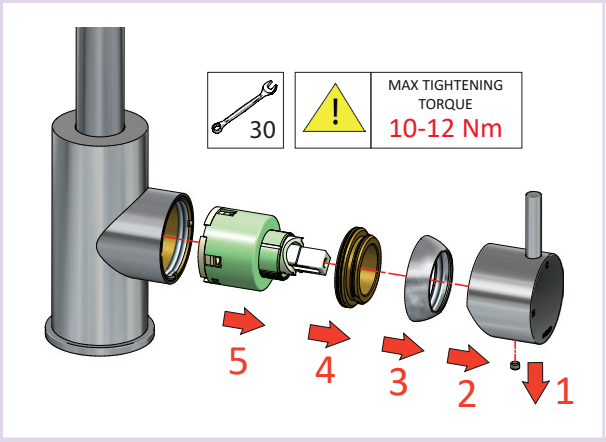

# Cleaning

| | ✓ | | | ✗ | | WARNING |
|---|---|---|---|---|---|---|
| CR CHROME | WATER ✓ | LIQUID SOAP ✓ | SMOOTH CLOTH ✓ | ABRASIVE SPONGE ✗ | ACID/ABRASIVE DETERGENT ✗ | Inoxidizable plated finish |
| GN BRUSHED NICKEL | WATER ✓ | LIQUID SOAP ✓ | SMOOTH CLOTH ✓ | ABRASIVE SPONGE ✗ | ACID/ABRASIVE DETERGENT ✗ | Inoxidizable plated finish<br>Avoid citrus based cleaners |
| BB BRUSHED BRASS | WATER ✓ | LIQUID SOAP ✓ | SMOOTH CLOTH ✓ | ABRASIVE SPONGE ✗ | ACID/ABRASIVE DETERGENT ✗ | Natural metal finish:<br>patina will form over time<br>Avoid citrus based cleaners |
| AB AGED BRASS | WATER ✓ | LIQUID SOAP ✓ | SMOOTH CLOTH ✓ | ABRASIVE SPONGE ✗ | ACID/ABRASIVE DETERGENT ✗ | Aged metal finish:<br>patina will form over time<br>Avoid citrus based cleaners |
| WH MATT WHITE | WATER ✓ | LIQUID SOAP ✓ | SMOOTH CLOTH ✓ | ABRASIVE SPONGE ✗ | ACID/ABRASIVE DETERGENT ✗ | Varnished finish:<br>subject to surface scratches if not properly handled<br>Avoid citrus based cleaners |
| BL MATT BLACK | WATER ✓ | LIQUID SOAP ✓ | SMOOTH CLOTH ✓ | ABRASIVE SPONGE ✗ | ACID/ABRASIVE DETERGENT ✗ | Varnished finish:<br>subject to surface scratches if not properly handled<br>Avoid citrus based cleaners |
| AI AGED IRON | WATER ✓ | LIQUID SOAP ✓ | SMOOTH CLOTH ✓ | ABRASIVE SPONGE ✗ | ACID/ABRASIVE DETERGENT ✗ | Plated finish:<br>subject to surface scratches if not properly handled<br>Avoid citrus based cleaners |
| MGP MATT GUNMETAL PVD | WATER ✓ | LIQUID SOAP ✓ | SMOOTH CLOTH ✓ | ABRASIVE SPONGE ✗ | ACID/ABRASIVE DETERGENT ✗ | Inoxidizable PVD finish<br>Avoid citrus based cleaners |
| MCP MATT CHAMPAGNE PVD | WATER ✓ | LIQUID SOAP ✓ | SMOOTH CLOTH ✓ | ABRASIVE SPONGE ✗ | ACID/ABRASIVE DETERGENT ✗ | Inoxidizable PVD finish<br>Avoid citrus based cleaners |
| BBP BRUSHED BRASS PVD | WATER ✓ | LIQUID SOAP ✓ | SMOOTH CLOTH ✓ | ABRASIVE SPONGE ✗ | ACID/ABRASIVE DETERGENT ✗ | Inoxidizable PVD finish<br>Avoid citrus based cleaners |
| BZP BRUSHED BRONZE PVD | WATER ✓ | LIQUID SOAP ✓ | SMOOTH CLOTH ✓ | ABRASIVE SPONGE ✗ | ACID/ABRASIVE DETERGENT ✗ | Inoxidizable PVD finish<br>Avoid citrus based cleaners |
| TB TUSCAN BRONZE | WATER ✓ | LIQUID SOAP ✓ | SMOOTH CLOTH ✓ | ABRASIVE SPONGE ✗ | ACID/ABRASIVE DETERGENT ✗ | Varnished finish:<br>subject to surface scratches if not properly handled<br>Avoid citrus based cleaners |

# Warranty

Scan Here
for Information